DocuSign Envelope ID: 574FF2F7-02B0-4CC3-9070-E8AEE1215A9F

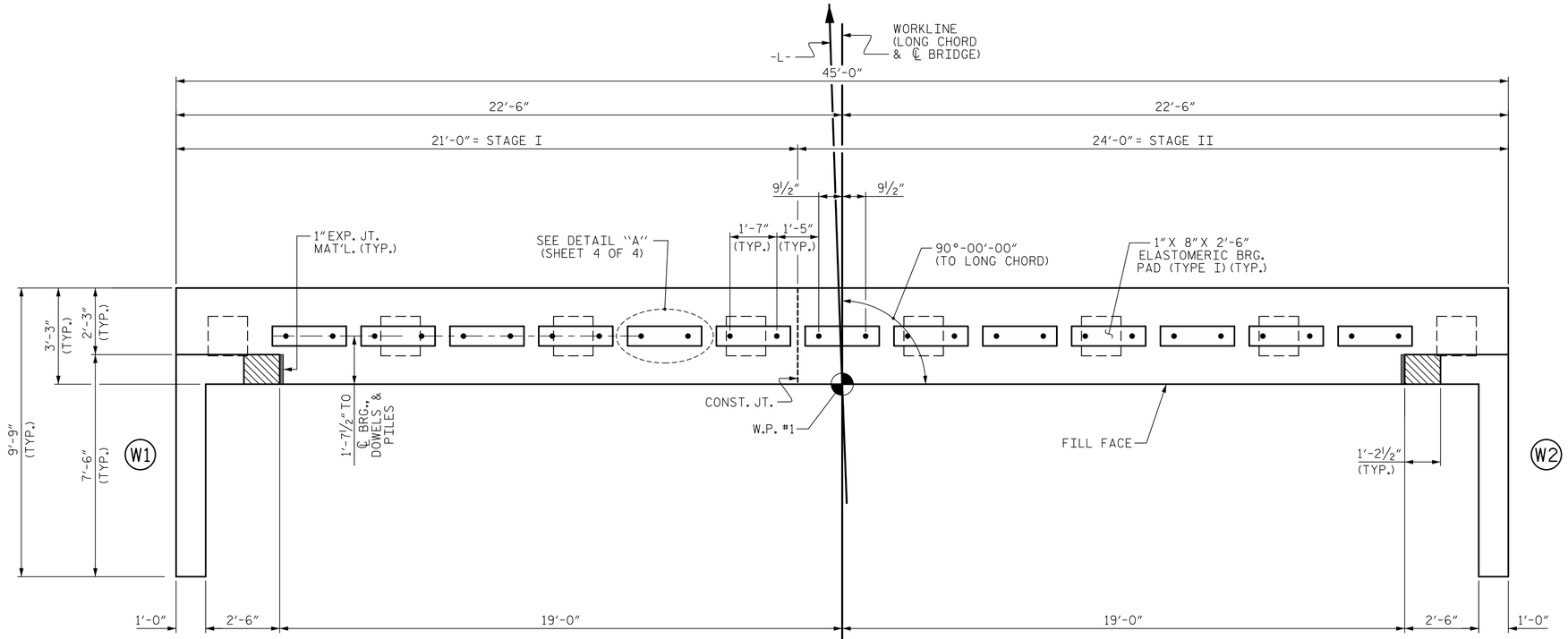

PLAN

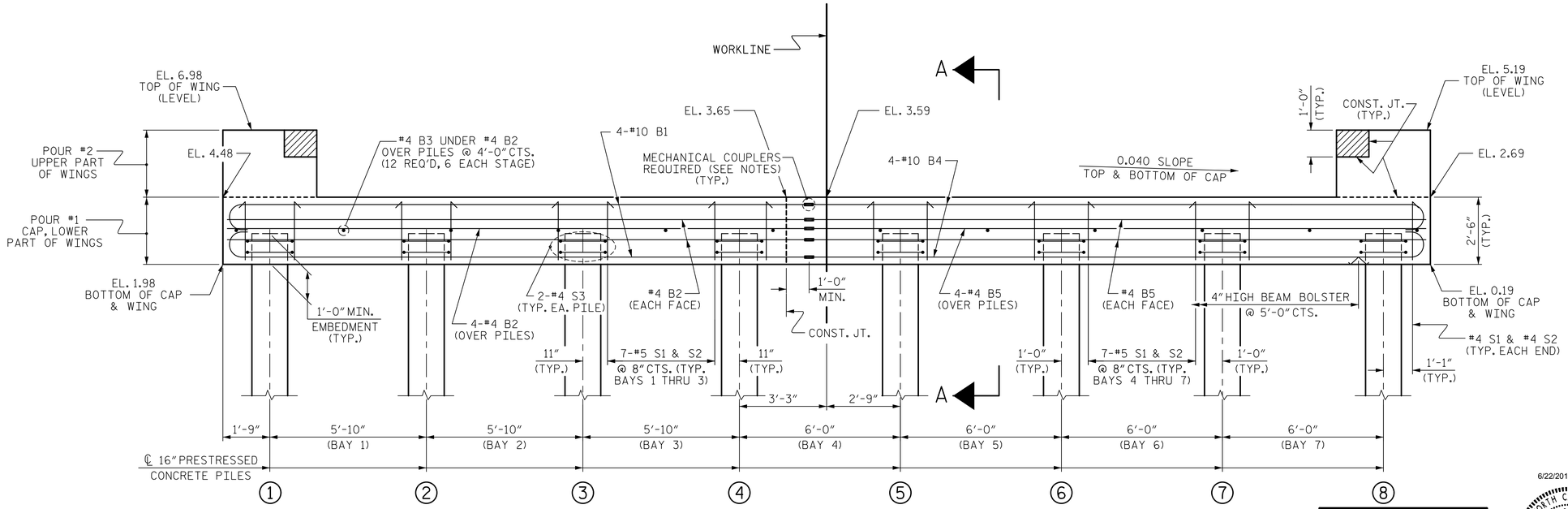

ELEVATION

WINGS NOT SHOWN FOR CLARITY.
FOR SECTION A-A, SEE SHEET 4 OF 4.

NOTES

STIRRUPS IN CAP MAY BE SHIFTED AS NECESSARY TO CLEAR DOWELS.

THE CONCRETE IN THE SHADED AREA OF THE WING SHALL BE POURED AFTER THE CONCRETE PARAPET IS CAST IF SLIP FORMING IS USED.

FOR WING DETAILS, SEE SHEET 3 OF 4.

MECHANICAL COUPLERS SHALL BE USED TO JOIN THE #4, AND #10 "B" BARS IN STAGE I WITH THE #4, AND #10 "B" BARS IN STAGE II.

INSTALL THE 4" Ø DRAIN PIPE THROUGH THE WINGWALL AS REQUIRED FOR REINFORCED BRIDGE APPROACH FILLS, SEE THE ROADWAY PLANS. REINFORCING STEEL IN THE WINGWALL MAY BE SHIFTED AS NECASSARY TO CLEAR THE DRAIN PIPE.

THE CONTRACTORS ATTENTION IS CALLED TO THE FACT THAT THE LENTHS OF THE #4 AND #10 "B" BARS AT THE STAGED CONSTRUCTION JOINT MAY NEED TO BE ADJUSTED DUE TO THE TYPE OF MECHANICAL BUTT SPLICE CHOSEN BY THE CONTRACTOR. NO ADDITIONAL PAYMENT WILL BE MADE FOR ANY ADJUSTMENTS.

THE CONCRETE IN THE END BENT CAPS OF END BENT NO. 1 SHALL CONTAIN SILICA FUME. SILICA FUME SHALL BE SUBSTITUTED FOR 5% OF THE PORTLAND CEMENT BY WEIGHT. IF THE OPTION OF ARTICLE 1024-1 OF THE STANDARD SPECIFICATIONS TO PARTIALLY SUBSTITUTE CLASS F FLY ASH FOR PORTLAND CEMENT IS EXERCISED, THEN THE RATE OF FLY ASH SUBSTITUTION SHALL BE REDUCED TO 1.0 LB OF FLY ASH PER 1.0 LB. NO PAYMENT WILL BE MADE FOR THIS SUBSTITUTION AS IT IS CONSIDERED INCIDENTAL TO THE LUMP SUM PRICE BID FOR CONSTRUCTION OF SUBSTRUCTURE.

TOP OF PILE ELEVATIONS	
1	2.92
2	2.68
3	2.45
4	2.22
5	1.98
6	1.74
7	1.50
8	1.27

PROJECT NO. 17BP.1.R.59
TYRRELL COUNTY
STATION: 15+93.75 -L-

SHEET 1 OF 4

STATE OF NORTH CAROLINA
DEPARTMENT OF TRANSPORTATION
RALEIGH

SUBSTRUCTURE

END BENT No. 1

Prepared by
URS
URS Corporation - North Carolina
1600 Perimeter Park Drive, Suite 400
Morrisville, NC 27560
PHONE: (919) 461-1100 FAX: (919) 461-1415
NC LIC.# C-2243

6/22/2015
NORTH CAROLINA PROFESSIONAL SEAL 039173 ENGINEER MATTHEW K. TOM

DocuSigned by: Matthew K. Tom
749E6F30B6442A...

REVISIONS								SHEET NO.
NO.	BY:	DATE:	NO.	BY:	DATE:			S-22
1			3					TOTAL SHEETS
2			4					32

DRAWN BY : R. L. WHITCHER DATE : 1/26/15
CHECKED BY : M. K. TOM DATE : 2/20/15
DESIGNED BY : M. K. TOM DATE : 1/26/15

6/17/2015
S:\Tyrrell 09\Structures\Submittals\2015_05_19 Final Design and Tracings\Drawings\22 Tyrrell 09_E1_01.dgn
matt_tom