DocuSign Envelope ID: 574FF2F7-02B0-4CC3-9070-E8AEE1215A9F

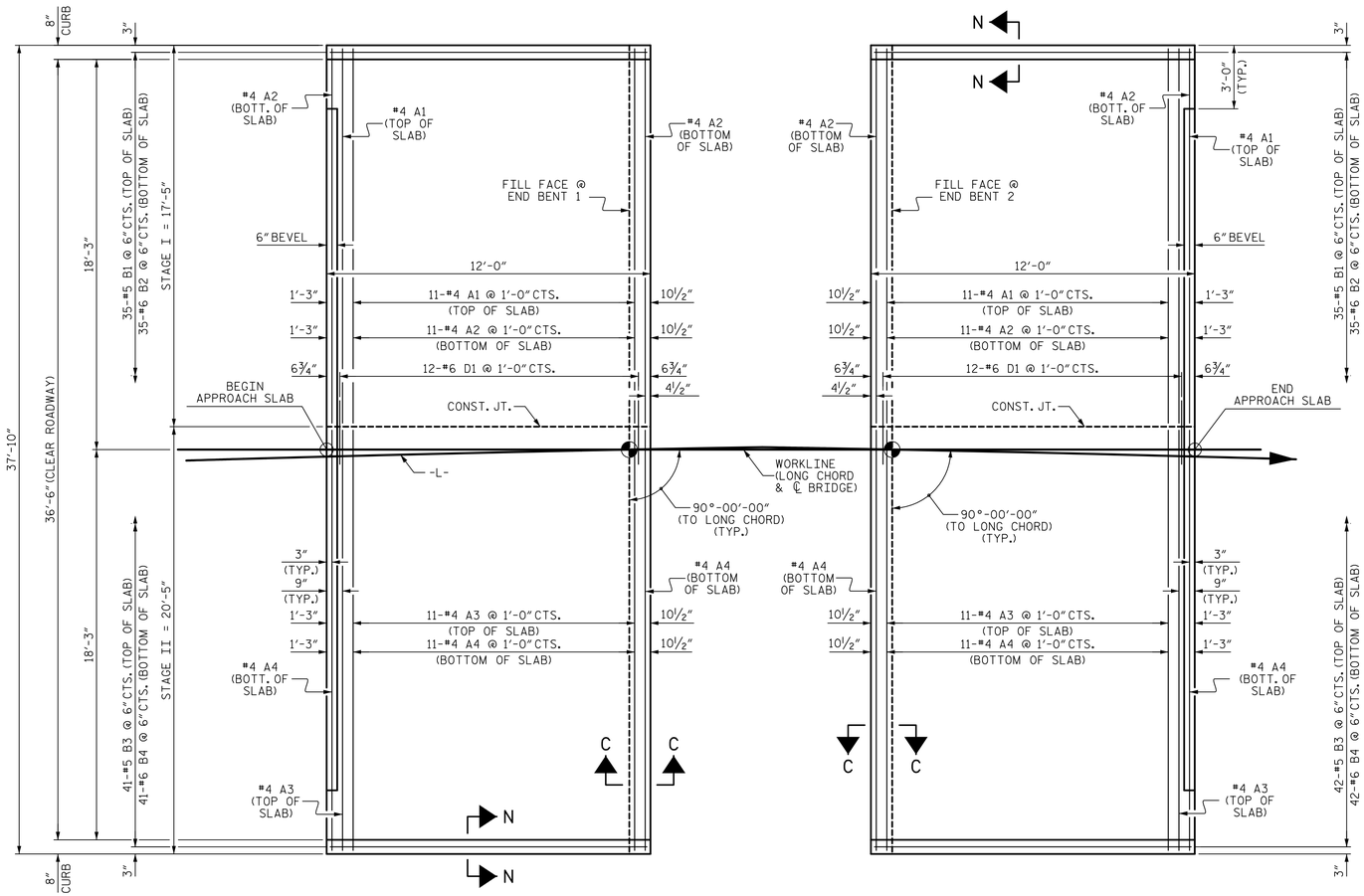

PLAN @ END BENT 1

PLAN @ END BENT 2

DIMENSIONS SHOWN ARE TYPICAL FOR BOTH APPROACH SLABS

BILL OF MATERIAL					
APPROACH SLAB AT EB #1 STAGE I					
BAR	NUMBER	SIZE	TYPE	LENGTH	WEIGHT
✳ A1	12	#4	STR.	17'-1"	137
A2	13	#4	STR.	17'-1"	148
✳ B1	35	#5	STR.	11'-2"	408
B2	35	#6	STR.	11'-8"	613
✳ D1	12	#6	STR.	3'-0"	54
REINFORCING STEEL			=		761 LBS.
✳ EPOXY COATED REINFORCING STEEL			=		599 LBS.
CLASS AA CONCRETE			=		10.5 C.Y.

BILL OF MATERIAL					
PPROACH SLAB AT EB #2 STAGE I					
BAR	NUMBER	SIZE	TYPE	LENGTH	WEIGHT
✳ A1	12	#4	STR.	17'-1"	137
A2	13	#4	STR.	17'-1"	148
✳ B1	35	#5	STR.	11'-2"	408
B2	35	#6	STR.	11'-8"	613
✳ D1	12	#6	STR.	3'-0"	54
REINFORCING STEEL			=		761 LBS.
✳ EPOXY COATED REINFORCING STEEL			=		599 LBS.
CLASS AA CONCRETE			=		10.5 C.Y.

BILL OF MATERIAL					
APPROACH SLAB AT EB #1 STAGE II					
BAR	NUMBER	SIZE	TYPE	LENGTH	WEIGHT
✳ A3	12	#4	STR.	20'-1"	161
A4	13	#4	STR.	20'-1"	174
✳ B1	41	#5	STR.	11'-2"	478
B2	41	#6	STR.	11'-8"	718
REINFORCING STEEL			=		892 LBS.
✳ EPOXY COATED REINFORCING STEEL			=		639 LBS.
CLASS AA CONCRETE			=		12.3 C.Y.

BILL OF MATERIAL					
APPROACH SLAB AT EB #2 STAGE II					
BAR	NUMBER	SIZE	TYPE	LENGTH	WEIGHT
✳ A3	12	#4	STR.	20'-1"	161
A4	13	#4	STR.	20'-1"	174
✳ B1	41	#5	STR.	11'-2"	478
B2	41	#6	STR.	11'-8"	718
REINFORCING STEEL			=		892 LBS.
✳ EPOXY COATED REINFORCING STEEL			=		639 LBS.
CLASS AA CONCRETE			=		12.3 C.Y.

ELASTOMERIC CONCRETE	
END BENT NO.	ELASTOMERIC CONCRETE ✳ (CU. FT.)
1	11.2
2	11.2
TOTAL	22.4

✳ BASED ON THE MINIMUM BLOCKOUT SHOWN.

NOTES

FOR REINFORCED BRIDGE APPROACH FILL INCLUDING GEOTEXTILE, IMPERMEABLE GEOMEMBRANE, 4" Ø DRAINAGE PIPE, #78M STONE, AND SELECT MATERIAL, SEE ROADWAY PLANS.

AREA BETWEEN THE WINGWALL AND APPROACH SLAB SHALL BE GRADED TO DRAIN THE WATER AWAY FROM THE FILL FACE OF THE BRIDGE AND SHALL BE PAVED. SEE ROADWAY PLANS.

FOR JOINT DETAILS, SEE "PRESTRESSED CONCRETE CORED SLAB UNIT" SHEETS.

APPROACH SLAB GROOVING IS REQUIRED.

DOWEL BARS TO BE PLACED PRIOR TO POURING STAGE 1 CONCRETE.

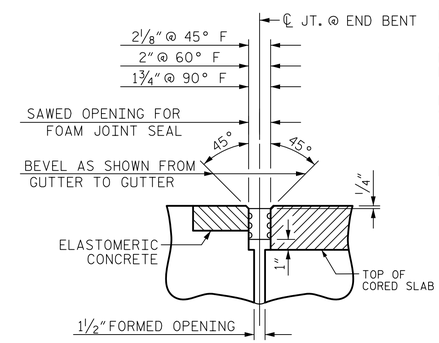

SECTION C-C
FOAM JOINT SEAL
(EXPANSION)

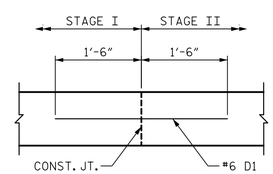

DOWEL DETAIL
(ELEVATION VIEW)

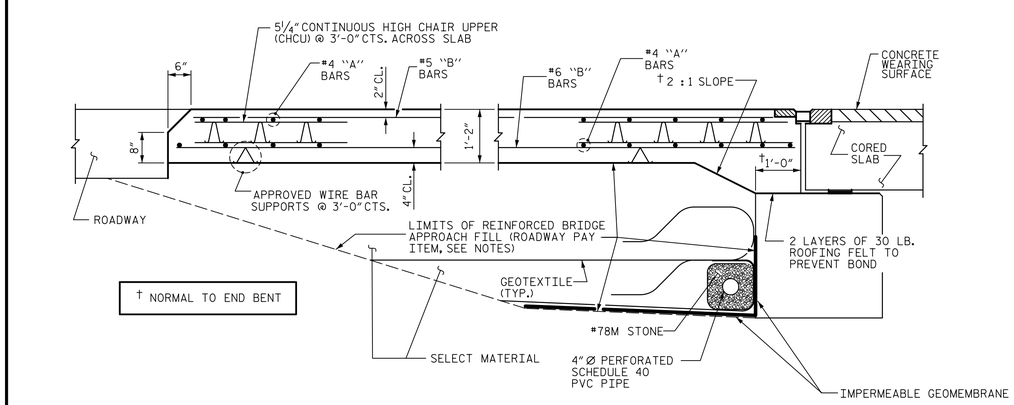

SECTION THRU SLAB

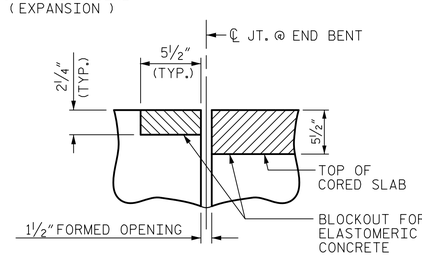

SECTION C-C
FOAM JOINT SEAL
(PRE-SAWED ELASTOMERIC CONCRETE DIMENSIONS)

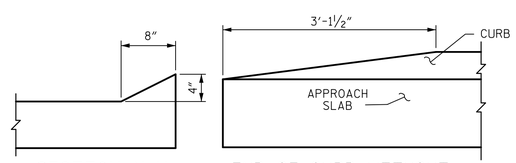

SECTION N-N

END OF CURB WITHOUT SHOULDER BERM GUTTER

CURB DETAILS

PROJECT NO. 17BP.1.R.59

TYRRELL COUNTY

STATION: 15+93.75 -L-

SHEET 1 OF 2

STATE OF NORTH CAROLINA
DEPARTMENT OF TRANSPORTATION
RALEIGH

STANDARD
BRIDGE APPROACH SLAB
FOR PRESTRESSED CONCRETE
CORED SLAB UNIT
(SUB-REGIONAL TIER)
90° SKEW

REVISIONS						SHEET NO.
NO.	BY:	DATE:	NO.	BY:	DATE:	S-31
1			3			TOTAL SHEETS
2			4			32

Prepared by
URS
URS Corporation – North Carolina
1600 Perimeter Park Drive, Suite 400
Morrisville, NC 27560
PHONE: (919) 461-1100 FAX: (919) 461-1415
NC LIC. # C-2243

6/22/2015
NORTH CAROLINA PROFESSIONAL SEAL 039173 ENGINEER MATTHEW K. TOM

DocuSigned by: Matthew K. Tom

ASSEMBLED BY : R. L. WHITCHER	DATE : 10/28/14		
CHECKED BY : M. K. TOM	DATE : 12/29/14		
DESIGNED BY : R. L. WHITCHER	DATE : 10/28/14		
DRAWN BY : SHS/MAA 5-09	REV. 12-11	MAA/AAC	
CHECKED BY : BCH 5-09	REV. 8-14	MAA/TMG	

6/17/2015
S:\Tyrrell 09\Structures\Submittals\2015_05_19 Final Design and Tracings\Drawings\31 Tyrrell 09_AS_01.dgn
matt_tom

STD. NO. BAS_39_90S